U.S. COAST GUARD
717
MAERSK
HAMBURG SÜD
Port of Seattle

USCG HAMILTON CLASS CUTTERS (378-foot WHEC Cutters)

1988 Configuration (FRAM)

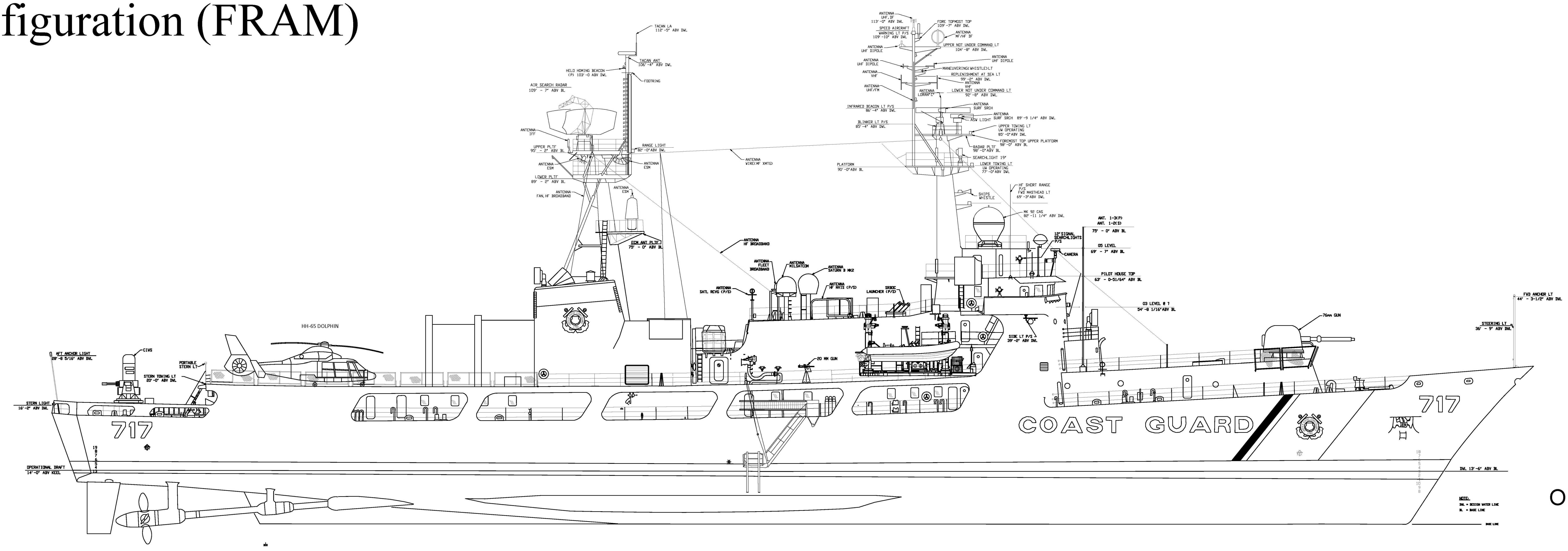
TACAN LA
112'-5" ABV DWL
TACAN ANT
106'-4" ABV DWL
HELO HOMING BEACON
(P) 103'-0 ABV DWL
FOOTRING
AIR SEARCH RADAR
109' - 7" ABV BL
ANTENNA
IFF
UPPER PLTF
95' - 2" ABV BL
RANGE LIGHT
82'-0" ABV DWL
ANTENNA
ESM
ANTENNA
ESM
LOWER PLTF
89' - 2" ABV BL
ANTENNA
FAN, HF BROADBAND
ANTENNA
ESM
ANTENNA
WIRE(MF XMTG)
ECM ANT PLTF
75' - 0" ABV BL
ANTENNA
HF BROADBAND
ANTENNA
FLEET
BROADBAND
ANTENNA
MILSATCOM
ANTENNA
SATURN B MK2
ANTENNA
SATL RCVG (P/S)
ANTENNA
HF NVIS (P/S)
SRBOC
LAUNCHER (P/S)
20 MM GUN
ANTENNA
UHF, DF
113'-0" ABV DWL
FORE TOPMOST TOP
109'-7" ABV DWL
SPEED AIRCRAFT
WARNING LT P/S
109'-10" ABV DWL
ANTENNA
MF/HF DF
ANTENNA
UHF DIPOLE
UPPER NOT UNDER COMMAND LT
104'-8" ABV DWL
ANTENNA
UHF DIPOLE
ANTENNA
UHF DIPOLE
MANEUVERING(WHISTLE)LT
ANTENNA
VHF
REPLENISHMENT AT SEA LT
99'-2" ABV DWL
ANTENNA
VHF
ANTENNA
UHF/FM
ANTENNA
LORAN"C"
LOWER NOT UNDER COMMAND LT
92'-8" ABV DWL
INFRARED BEACON LT P/S
86'-4" ABV DWL
ANTENNA
SURF SRCH
ANTENNA
SURF SRCH 89'-9 1/4" ABV DWL
ASW LIGHT
BLINKER LT P/S
85'-4" ABV DWL
UPPER TOWING LT
UW OPERATING
85'-0" ABV DWL
FOREMOST TOP UPPER PLATFORM
98'-0" ABV BL
RADAR PLTF
98'-0" ABV BL
SEARCHLIGHT 19"
PLATFORM
90'-0" ABV BL
LOWER TOWING LT
UW OPERATING
77'-0" ABV DWL
SHIPS
WHISTLE
HF SHORT RANGE
P/S
FWD MASTHEAD LT
69'-3" ABV DWL
MK 92 CAS
82'-11 1/4" ABV DWL
ANT. 1-3(P)
ANT. 1-2(S)
75' - 0" ABV BL
12" SIGNAL
SEARCHLIGHTS
P/S
CAMERA
05 LEVEL
69' - 7" ABV BL
PILOT HOUSE TOP
63' - 0-51/64" ABV BL
03 LEVEL @ ?
54'-8 1/16" ABV BL
SIDE LT P/S
39'-2" ABV DWL
76mm GUN
FWD ANCHOR LT
44' - 3-1/2" ABV DWL
STEERING LT
36' - 9" ABV DWL
HH-65 DOLPHIN
AFT ANCHOR LIGHT
28'-8 5/16" ABV DWL
CIWS
PORTABLE
STERN LT
STERN TOWING LT
20'-0" ABV DWL
STERN LIGHT
16'-2" ABV DWL
OPERATIONAL DRAFT
14'-0" ABV KEEL
717
COAST GUARD
717
DWL 13'-6" ABV BL
NOTE:
DWL = DESIGN WATER LINE
BL = BASE LINE
BASE LINE

OUTBOARD PROFILE

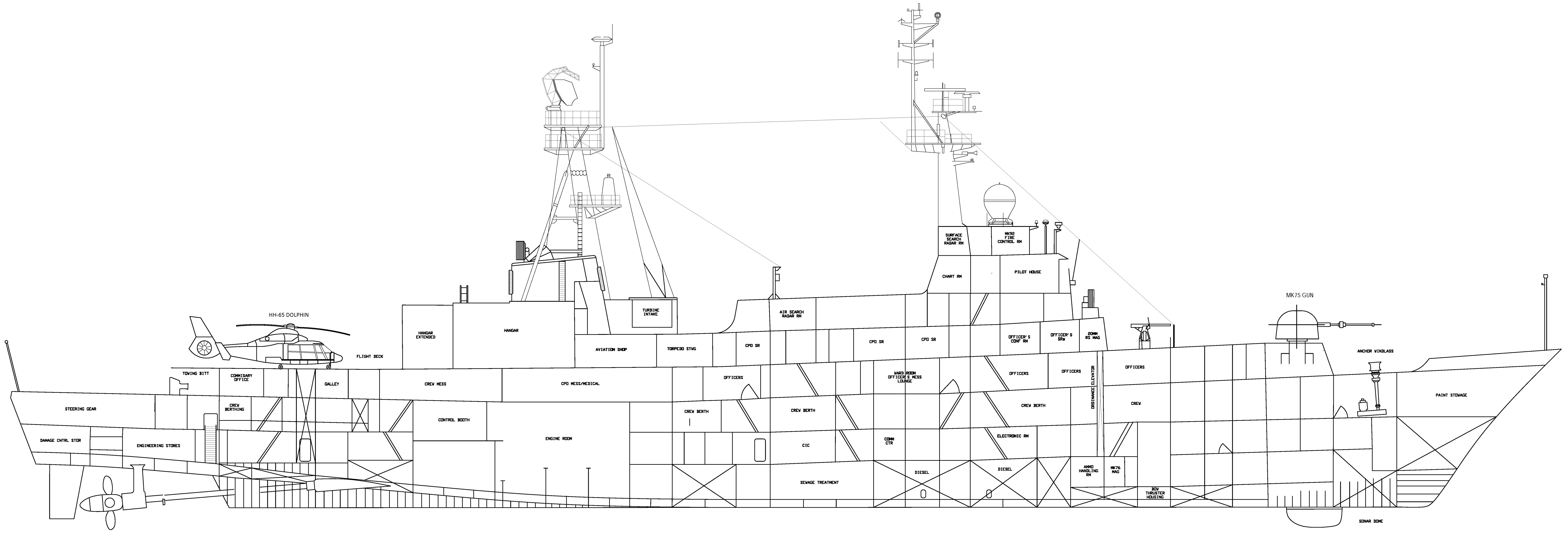
HH-65 DOLPHIN
FLIGHT DECK
HANGAR EXTENDED
HANGAR
TURBINE INTAKE
AIR SEARCH RADAR RM
SURFACE SEARCH RADAR RM
MK92 FIRE CONTROL RM
CHART RM
PILOT HOUSE
MK75 GUN
AVIATION SHOP
TORPEDO STWG
CPO SR
CPO SR
CPO SR
OFFICER'S CONF RM
OFFICER'S SRs
20MM RS MAG
ANCHOR WINDLASS
TOWING BITT
COMMISARY OFFICE
GALLEY
CREW MESS
CPO MESS/MEDICAL
OFFICERS
OFFICERS
WARD ROOM OFFICER'S MESS LOUNGE
OFFICERS
OFFICERS
OFFICERS
ORDINANCE ELEVATOR
STEERING GEAR
CREW BERTHING
CONTROL BOOTH
CREW BERTH
CREW BERTH
CREW BERTH
CREW
PAINT STOWAGE
DAMAGE CNTRL STOR
ENGINEERING STORES
ENGINE ROOM
CIC
COMM CTR
ELECTRONIC RM
SEWAGE TREATMENT
DIESEL
DIESEL
AMMO HANDLING RM
MK76 MAG
BOW THRUSTER HOUSING
SONAR DOME

INBOARD PROFILE

0 10 40 80 120 160 200 FEET 240 280 320 360 400 440

1/16"=1'-0"

0 5 10 15 20 METERS 30 35 40 45 50

1/16"=1'-0"

DELINEATED BY: REFORMATTED FROM ORIGINAL USCG DRAWINGS BY TODD A. CROTEAU, 2021

HAER MARITIME
RECORDING PROGRAM
NATIONAL PARK SERVICE
UNITED STATES DEPARTMENT OF THE INTERIOR

US COAST GUARD HAMILTON CLASS CUTTERS (378-FOOT WHEC CUTTERS)
WASHINGTON VARIOUS LOCATIONS THROUGHOUT THE UNITED STATES DISTRICT OF COLUMBIA

SHEET
5 OF 7

HISTORIC AMERICAN
ENGINEERING RECORD
DC-79

LIBRARY OF CONGRESS
INDEX NUMBER

USCG HAMILTON CLASS CUTTERS (378-foot WHEC Cutters)

1988 Configuration (FRAM)

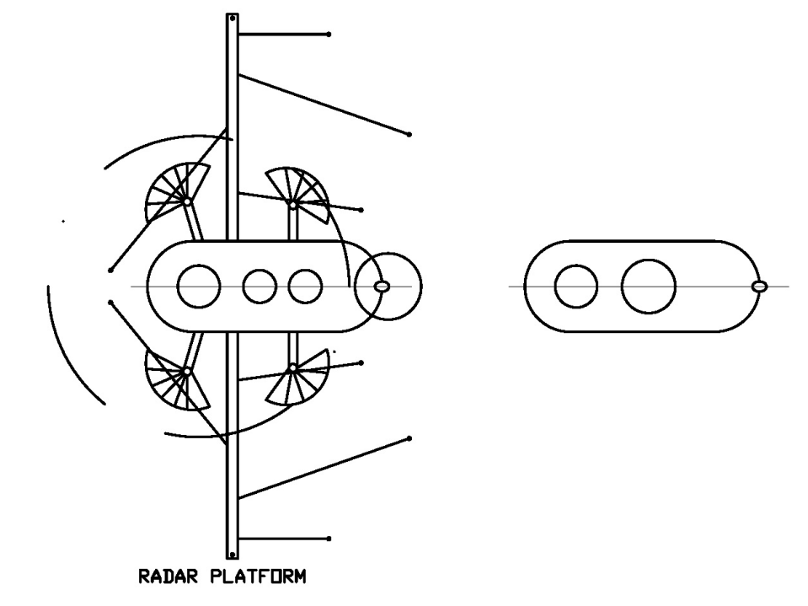
RADAR PLATFORM

RADAR PLATFORM

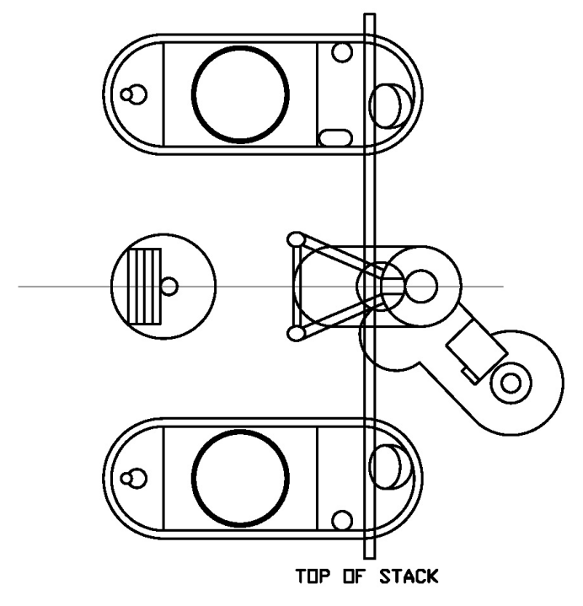
TOP OF STACK

TOP OF STACK

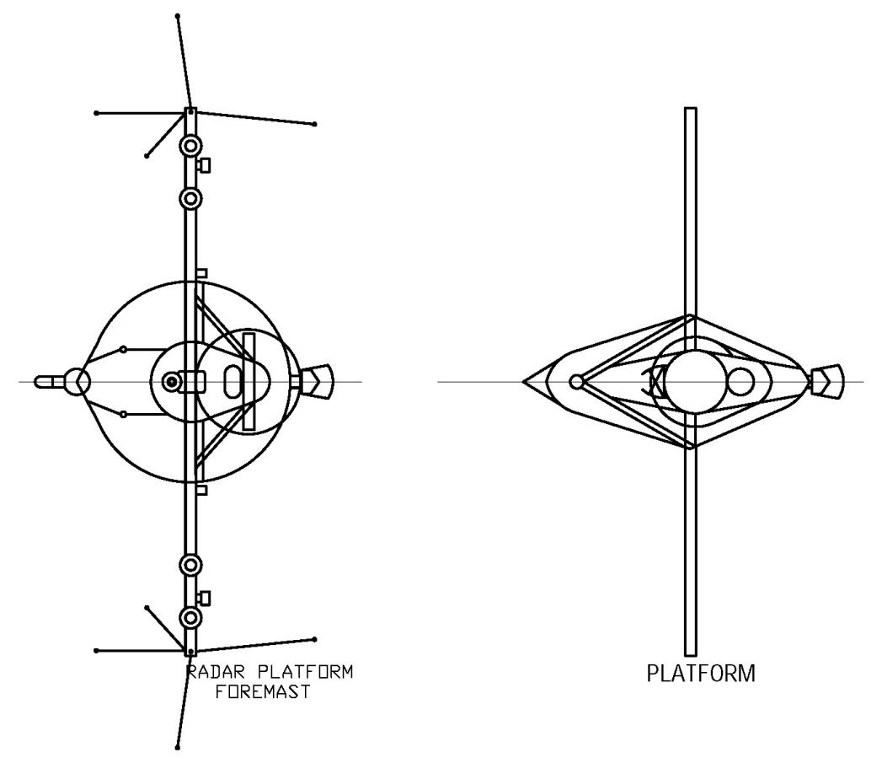
RADAR PLATFORM FOREMAST
PLATFORM

MAST PLATFORMS

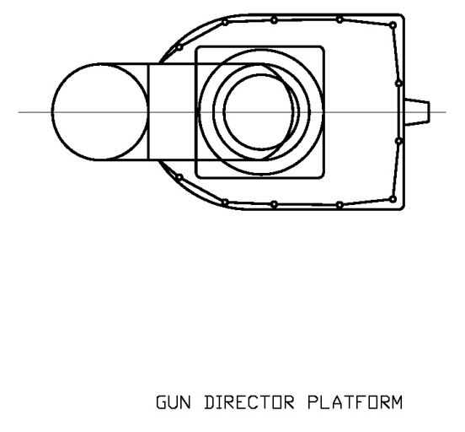
GUN DIRECTOR PLATFORM

GUN DIRECTOR PLATFORM

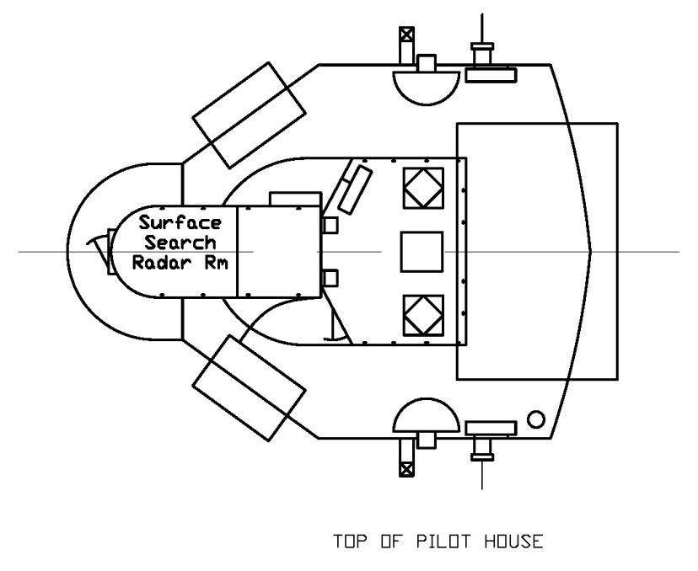
Surface Search Radar Rm
TOP OF PILOT HOUSE

TOP OF PILOT HOUSE

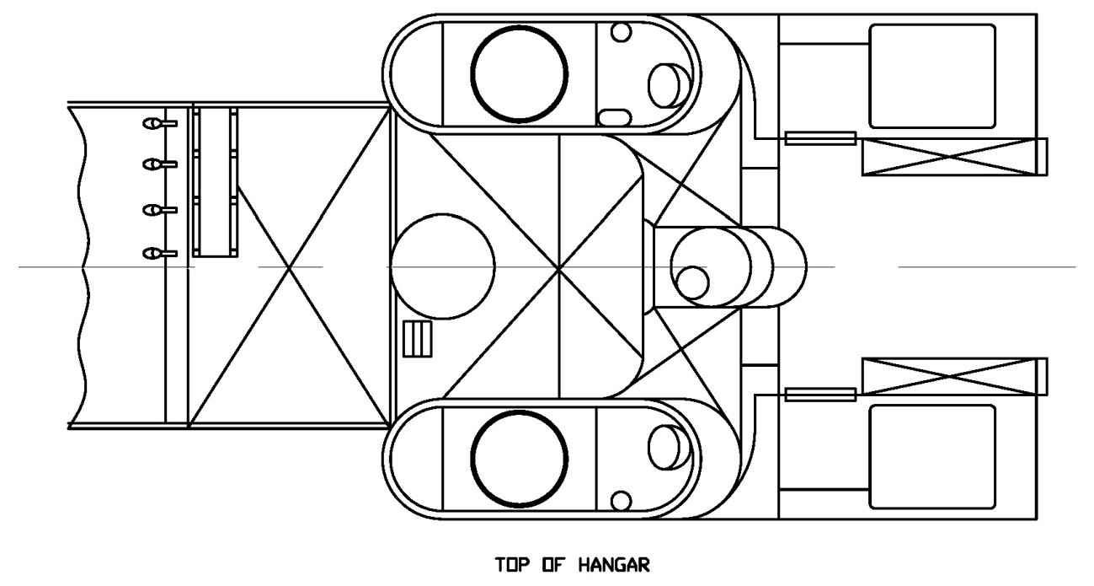
TOP OF HANGAR

TOP OF HANGAR

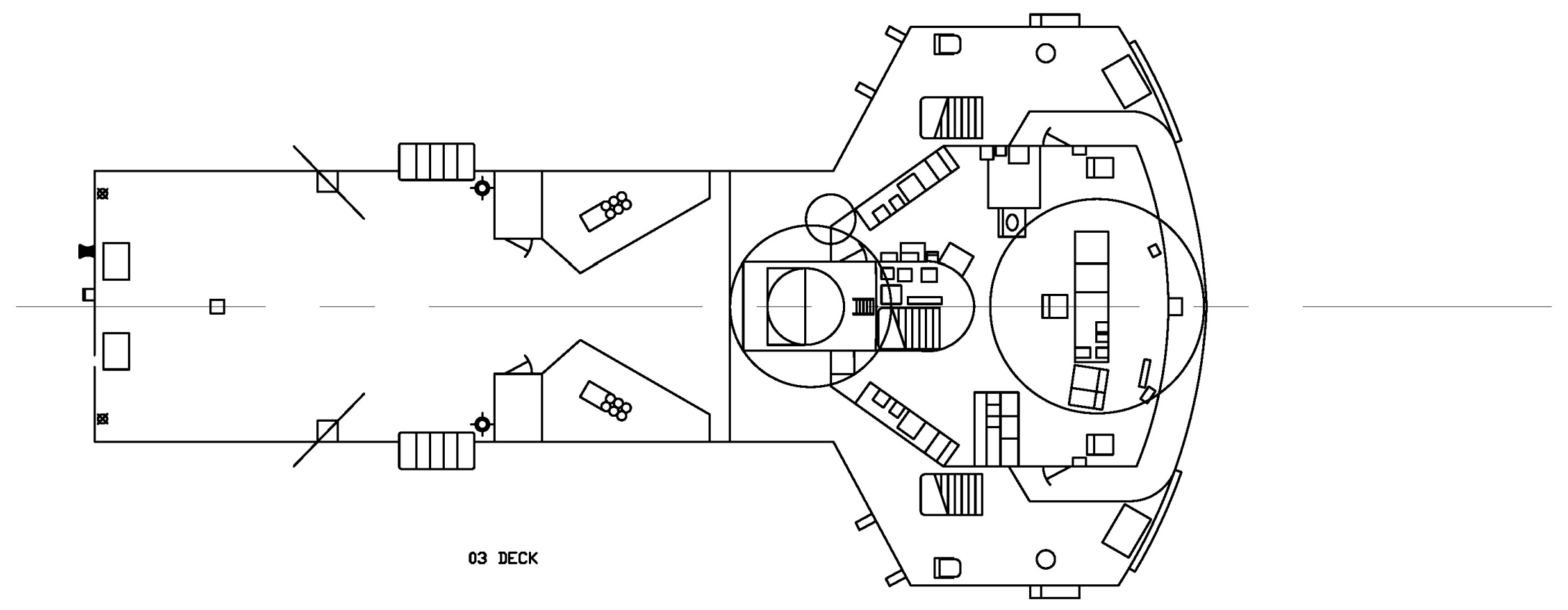

03 DECK

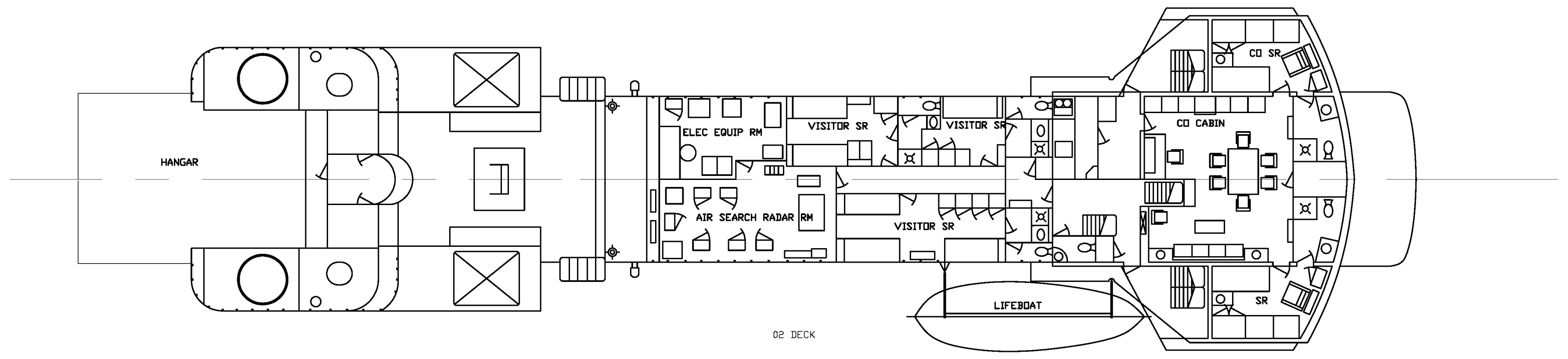
HANGAR
ELEC EQUIP RM
VISITOR SR
AIR SEARCH RADAR RM
CO CABIN
CO SR
SR
LIFEBOAT
02 DECK

02 DECK

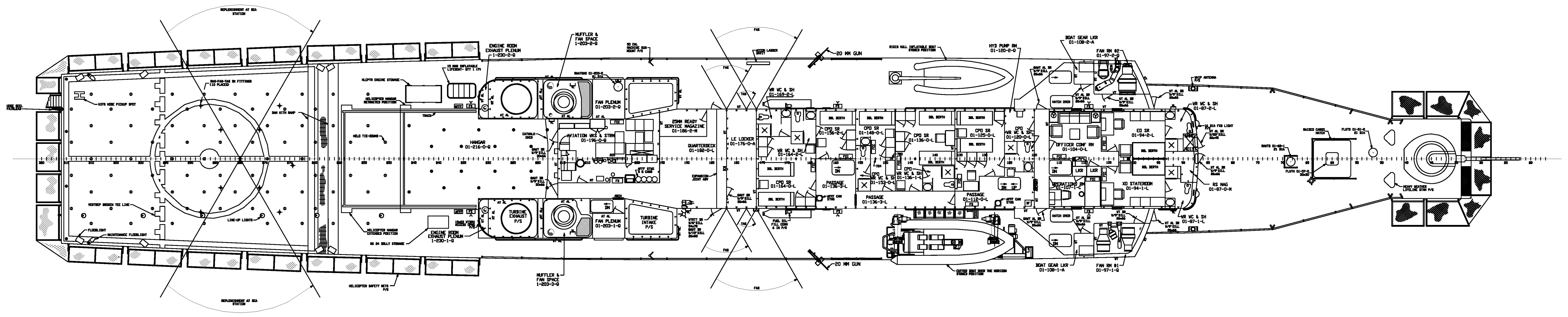
HANGAR
20 MM GUN
PASSAGE

01 DECK

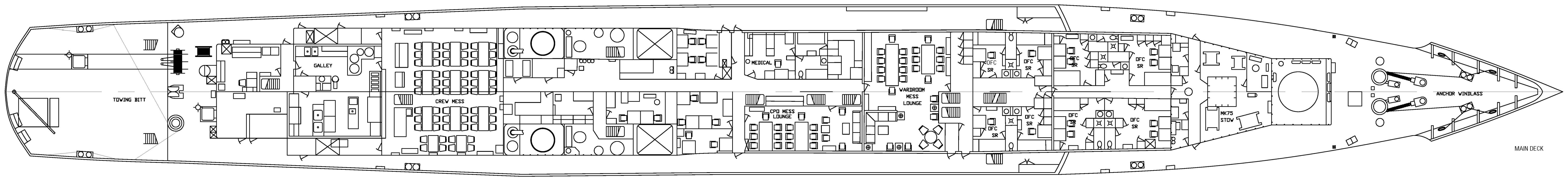
TOWING BITT
GALLEY
CREW MESS
MEDICAL
CPO MESS LOUNGE
WARDROOM MESS LOUNGE
OFC SR
MK75 STOW
ANCHOR WINDLASS
MAIN DECK

MAIN DECK

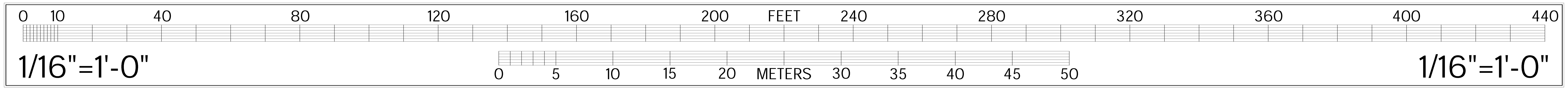
0
10
40
80
120
160
200
FEET
240
280
320
360
400
440
0
5
10
15
20
METERS
30
35
40
45
50

1/16"=1'-0"

1/16"=1'-0"

DELINEATED BY: REFORMATTED FROM ORIGINAL USCG DRAWINGS BY TODD A. CROTEAU, 2021

HAER MARITIME
RECORDING PROGRAM
NATIONAL PARK SERVICE
UNITED STATES DEPARTMENT OF THE INTERIOR

US COAST GUARD HAMILTON CLASS CUTTERS (378-FOOT WHEC CUTTERS)
VARIOUS LOCATIONS THROUGHOUT THE UNITED STATES
WASHINGTON DISTRICT OF COLUMBIA

SHEET
6 OF 7

HISTORIC AMERICAN
ENGINEERING RECORD
DC-79

LIBRARY OF CONGRESS
INDEX NUMBER

USCG HAMILTON CLASS CUTTERS (378-foot WHEC Cutters)

1988 Configuration (FRAM)

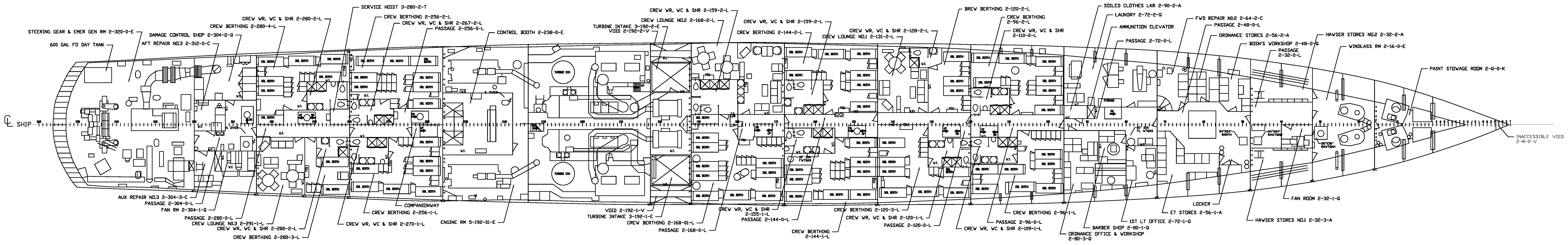
STEERING GEAR & EMER GEN RM 2-320-0-E
600 GAL FO DAY TANK
DAMAGE CONTROL SHOP 2-304-2-Q
AFT REPAIR NO.3 2-312-0-C
CREW BERTHING 2-280-4-L
CREW WR, WC & SHR 2-280-2-L
SERVICE HOIST 3-280-2-T
CREW BERTHING 2-256-2-L
CREW WR, WC & SHR 2-267-2-L
PASSAGE 2-256-0-L
CONTROL BOOTH 2-238-0-E
TURBINE INTAKE 3-192-2-E
VOID 2-192-2-V
CREW WR, WC & SHR 2-159-2-L
CREW LOUNGE NO.2 2-168-2-L
CREW WR, WC & SHR 2-159-2-L
CREW BERTHING 2-144-2-L
CREW WR, WC & SHR 2-128-2-L
CREW LOUNGE NO.1 2-131-2-L
BREW BERTHING 2-120-2-L
CREW BERTHING 2-96-2-L
CREW WR, WC & SHR 2-110-2-L
SOILED CLOTHES LKR 2-90-2-A
LAUNDRY 2-72-2-Q
AMMUNITION ELEVATOR
PASSAGE 2-72-0-L
FWD REPAIR NO.2 2-64-2-C
PASSAGE 2-48-0-L
ORDNANCE STORES 2-56-2-A
BOSN'S WORKSHOP 2-48-2-Q
PASSAGE 2-32-0-L
HAWSER STORES NO.2 2-32-2-A
WINDLASS RM 2-16-0-E
PAINT STOWAGE ROOM 2-Q-0-K
INACCESSIBLE VOID 2-R-0-V
AUX REPAIR NO.3 2-304-3-C
PASSAGE 2-304-0-L
FAN RM 2-304-1-Q
PASSAGE 2-280-0-L
CREW LOUNGE NO.3 2-291-1-L
CREW WR, WC & SHR 2-280-2-L
CREW BERTHING 2-280-3-L
CREW WR, WC & SHR 2-270-1-L
COMPANIONWAY
CREW BERTHING 2-256-1-L
ENGINE RM 5-192-01-E
VOID 2-192-1-V
TURBINE INTAKE 3-192-1-E
CREW BERTHING 2-168-01-L
PASSAGE 2-168-0-L
CREW WR, WC & SHR 2-155-1-L
PASSAGE 2-144-0-L
CREW BERTHING 2-144-1-L
CREW BERTHING 2-120-3-L
CREW WR, WC & SHR 2-120-1-L
PASSAGE 2-120-0-L
CREW WR, WC & SHR 2-109-1-L
PASSAGE 2-96-0-L
CREW BERTHING 2-96-1-L
ORDNANCE OFFICE & WORKSHOP 2-80-3-Q
BARBER SHOP 2-80-1-Q
1ST LT OFFICE 2-72-1-Q
ET STORES 2-56-1-A
LOCKER
HAWSER STORES NO.1 2-32-3-A
FAN ROOM 2-32-1-Q
DBL BERTH
TURBINE EXH
V.T.
℄ SHIP

SECOND DECK

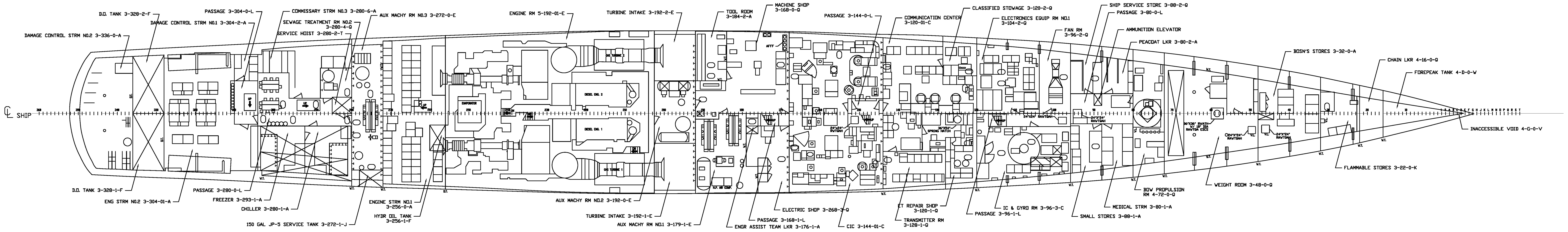
DAMAGE CONTROL STRM NO.2 3-336-0-A
D.O. TANK 3-328-2-F
DAMAGE CONTROL STRM NO.1 3-304-2-A
PASSAGE 3-304-0-L
COMMISSARY STRM NO.3 3-280-6-A
SEWAGE TREATMENT RM NO.2 3-280-4-Q
SERVICE HOIST 3-280-2-T
AUX MACHY RM NO.3 3-272-0-E
ENGINE RM 5-192-01-E
TURBINE INTAKE 3-192-2-E
TOOL ROOM 3-184-2-A
MACHINE SHOP 3-168-0-Q
PASSAGE 3-144-0-L
COMMUNICATION CENTER 3-120-01-C
CLASSIFIED STOWAGE 3-120-2-Q
ELECTRONICS EQUIP RM NO.1 3-104-2-Q
FAN RM 3-96-2-Q
SHIP SERVICE STORE 3-88-2-Q
PASSAGE 3-80-0-L
AMMUNITION ELEVATOR
PEACOAT LKR 3-80-2-A
BOSN'S STORES 3-32-0-A
CHAIN LKR 4-16-0-Q
FOREPEAK TANK 4-D-0-W
INACCESSIBLE VOID 4-G-0-V
D.O. TANK 3-328-1-F
ENG STRM NO.2 3-304-01-A
PASSAGE 3-280-0-L
FREEZER 3-293-1-A
CHILLER 3-280-1-A
150 GAL JP-5 SERVICE TANK 3-272-1-J
ENGINE STRM NO.1 3-256-0-A
HYDR OIL TANK 3-256-1-F
AUX MACHY RM NO.2 3-192-0-E
TURBINE INTAKE 3-192-1-E
AUX MACHY RM NO.1 3-179-1-E
ELECTRIC SHOP 3-268-3-Q
PASSAGE 3-168-1-L
ENGR ASSIST TEAM LKR 3-176-1-A
CIC 3-144-01-C
ET REPAIR SHOP 3-120-1-Q
TRANSMITTER RM 3-128-1-Q
PASSAGE 3-96-1-L
IC & GYRO RM 3-96-3-C
SMALL STORES 3-88-1-A
MEDICAL STRM 3-80-1-A
BOW PROPULSION RM 4-72-0-Q
WEIGHT ROOM 3-48-0-Q
FLAMMABLE STORES 3-22-0-K
EVAPORATOR
GAS TURBINE 2
GAS TURBINE 1
DIESEL ENG. 2
DIESEL ENG. 1
H.P. AIR COMP.
AFFF
24"X24" RWTOAH
36"X54" SPRING HATCH
36"X36" RWATH W/ 18" DIA RAWTOA ESCS
V.T.
℄ SHIP

THIRD DECK

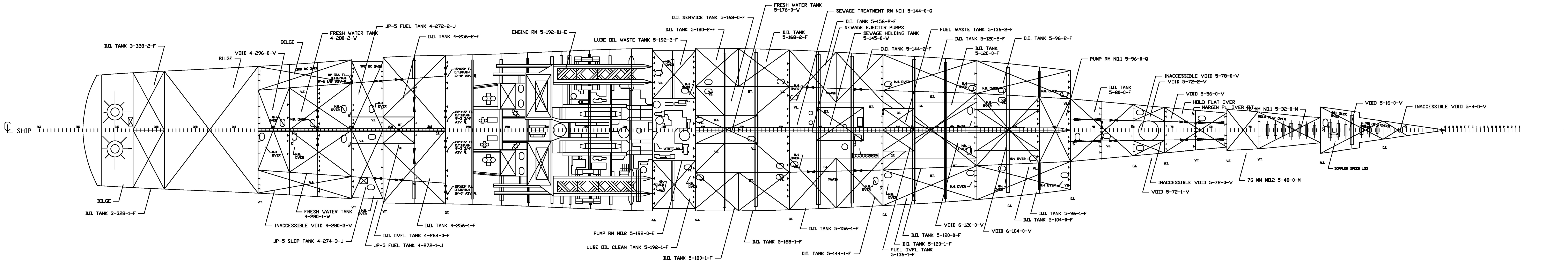
D.O. TANK 3-328-2-F
BILGE
VOID 4-296-0-V
BILGE
FRESH WATER TANK 4-280-2-W
JP-5 FUEL TANK 4-272-2-J
D.O. TANK 4-256-2-F
ENGINE RM 5-192-01-E
LUBE OIL WASTE TANK 5-192-2-F
D.O. SERVICE TANK 5-168-0-F
D.O. TANK 5-180-2-F
FRESH WATER TANK 5-176-0-W
D.O. TANK 5-168-2-F
SEWAGE TREATMENT RM NO.1 5-144-0-Q
D.O. TANK 5-156-2-F
SEWAGE EJECTOR PUMPS
SEWAGE HOLDING TANK 5-145-0-W
D.O. TANK 5-144-2-F
FUEL WASTE TANK 5-136-2-F
D.O. TANK 5-120-2-F
D.O. TANK 5-120-0-F
D.O. TANK 5-96-2-F
PUMP RM NO.1 5-96-0-Q
D.O. TANK 5-80-0-F
INACCESSIBLE VOID 5-78-0-V
VOID 5-72-2-V
VOID 5-56-0-V
HOLD FLAT OVER
MARGIN PL. OVER
76 MM NO.1 5-32-0-M
VOID 5-16-0-V
INACCESSIBLE VOID 5-4-0-V
BILGE
D.O. TANK 3-328-1-F
FRESH WATER TANK 4-280-1-W
INACCESSIBLE VOID 4-280-3-V
JP-5 SLOP TANK 4-274-3-J
D.O. OVFL TANK 4-264-0-F
JP-5 FUEL TANK 4-272-1-J
D.O. TANK 4-256-1-F
PUMP RM NO.2 5-192-0-E
LUBE OIL CLEAN TANK 5-192-1-F
D.O. TANK 5-180-1-F
D.O. TANK 5-168-1-F
D.O. TANK 5-156-1-F
D.O. TANK 5-144-1-F
FUEL OVFL TANK 5-136-1-F
D.O. TANK 5-120-1-F
D.O. TANK 5-120-0-F
VOID 6-120-0-V
VOID 6-104-0-V
D.O. TANK 5-104-0-F
D.O. TANK 5-96-1-F
INACCESSIBLE VOID 5-72-0-V
VOID 5-72-1-V
76 MM NO.2 5-48-0-M
DOPPLER SPEED LOG
3RD DK OVER
M.H. OVER
SWASH
WTRTT DR
V.T.
O.T.
℄ SHIP

HOLD FLAT

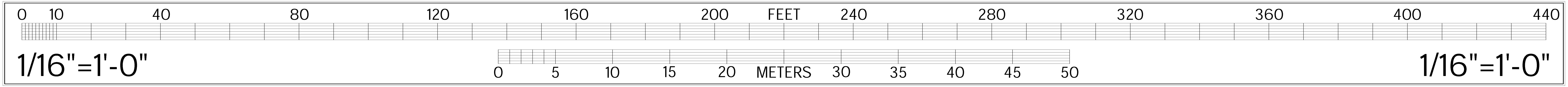
0
10
40
80
120
160
200
FEET
240
280
320
360
400
440
0
5
10
15
20
METERS
30
35
40
45
50

1/16"=1'-0"

1/16"=1'-0"

DELINEATED BY: REFORMATTED FROM ORIGINAL USCG DRAWINGS BY TODD A. CROTEAU, 2021

HAER MARITIME
RECORDING PROGRAM
NATIONAL PARK SERVICE
UNITED STATES DEPARTMENT OF THE INTERIOR

US COAST GUARD HAMILTON CLASS CUTTERS (378-FOOT WHEC CUTTERS)
VARIOUS LOCATIONS THROUGHOUT THE UNITED STATES
WASHINGTON
DISTRICT OF COLUMBIA

SHEET
7 OF 7

HISTORIC AMERICAN
ENGINEERING RECORD
DC-79

LIBRARY OF CONGRESS
INDEX NUMBER